Catalogo ricambi
Catalogue pièces détachées
Spare parts catalogue

Cucine serie:
Cuisinières série:
Cookers serie:

66 N

Modello:
Modèle:
Model:

FG 610 JA/N

PM66GGG40W

Ed. 07-2014 **505538**

1

ABITACOLO
HABILLAGE
COOKER BODY

COD. 505538

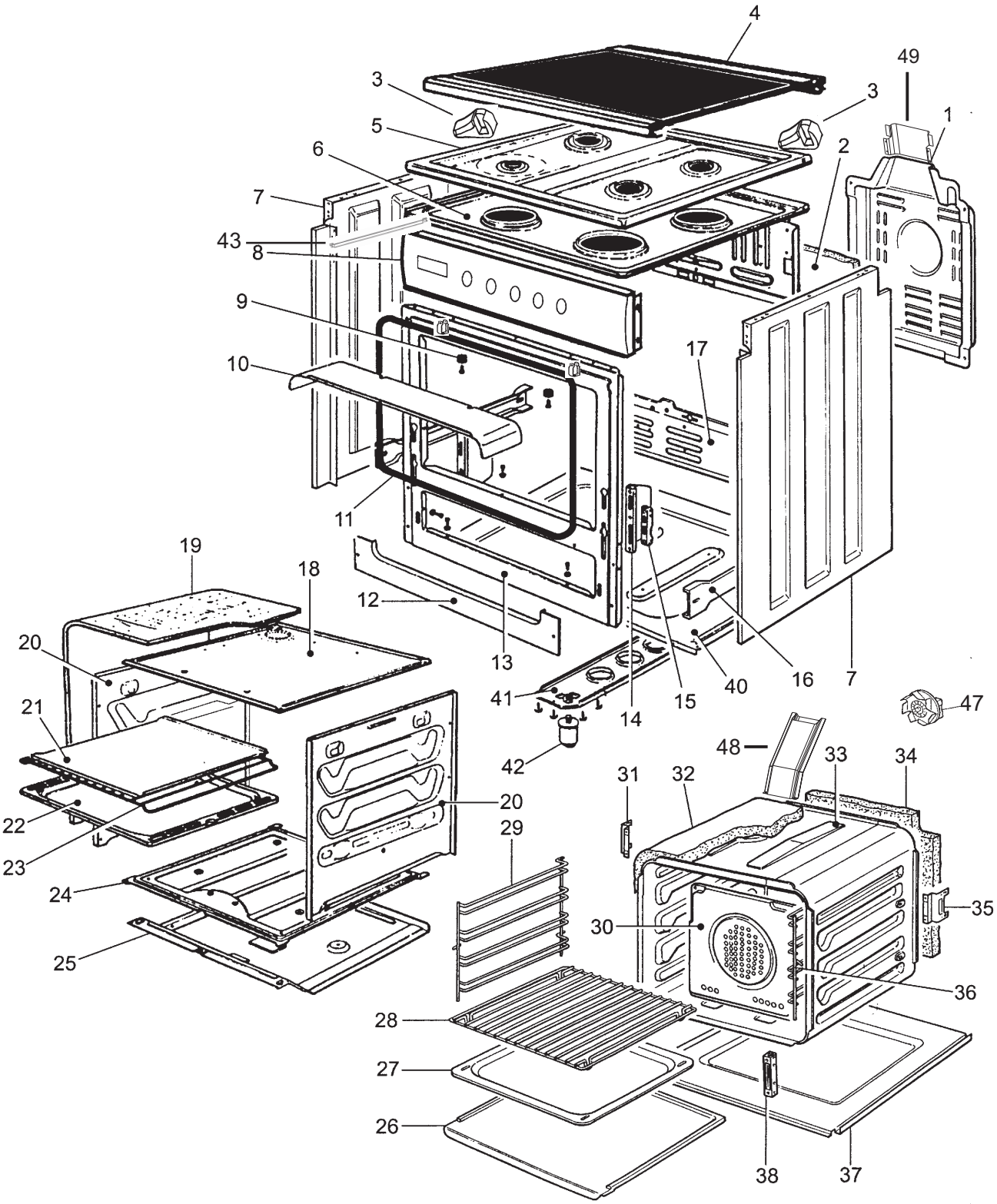

2

PORTA
PORTE
DOOR

COD. 505538

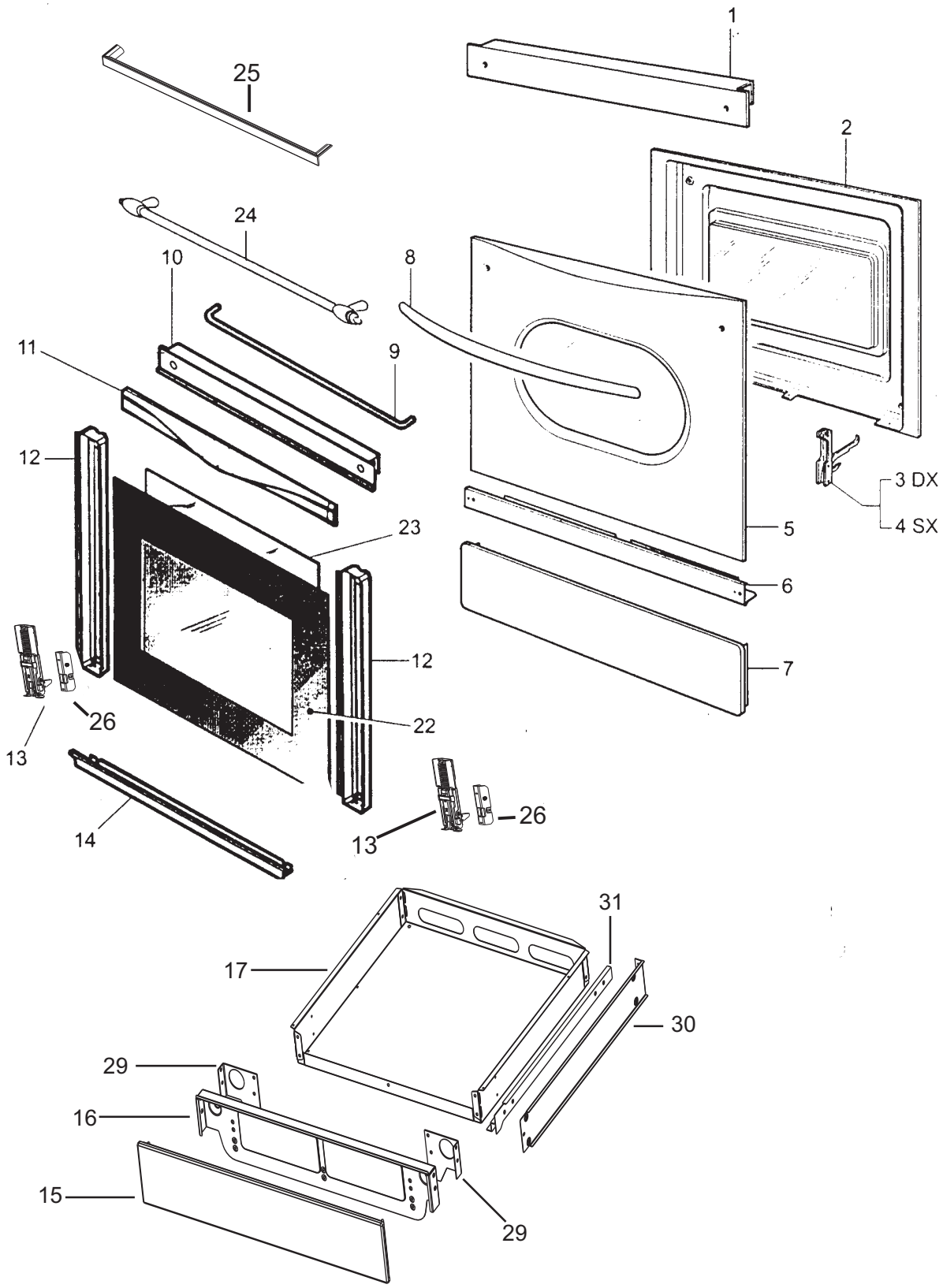

3

EQUIPAGGIAMENTO GAS ELETTRICO
EQUIPEMENT GAZ ELECTRIQUE
GAS AND ELECTRIC EQUIPMENT

COD. 505538

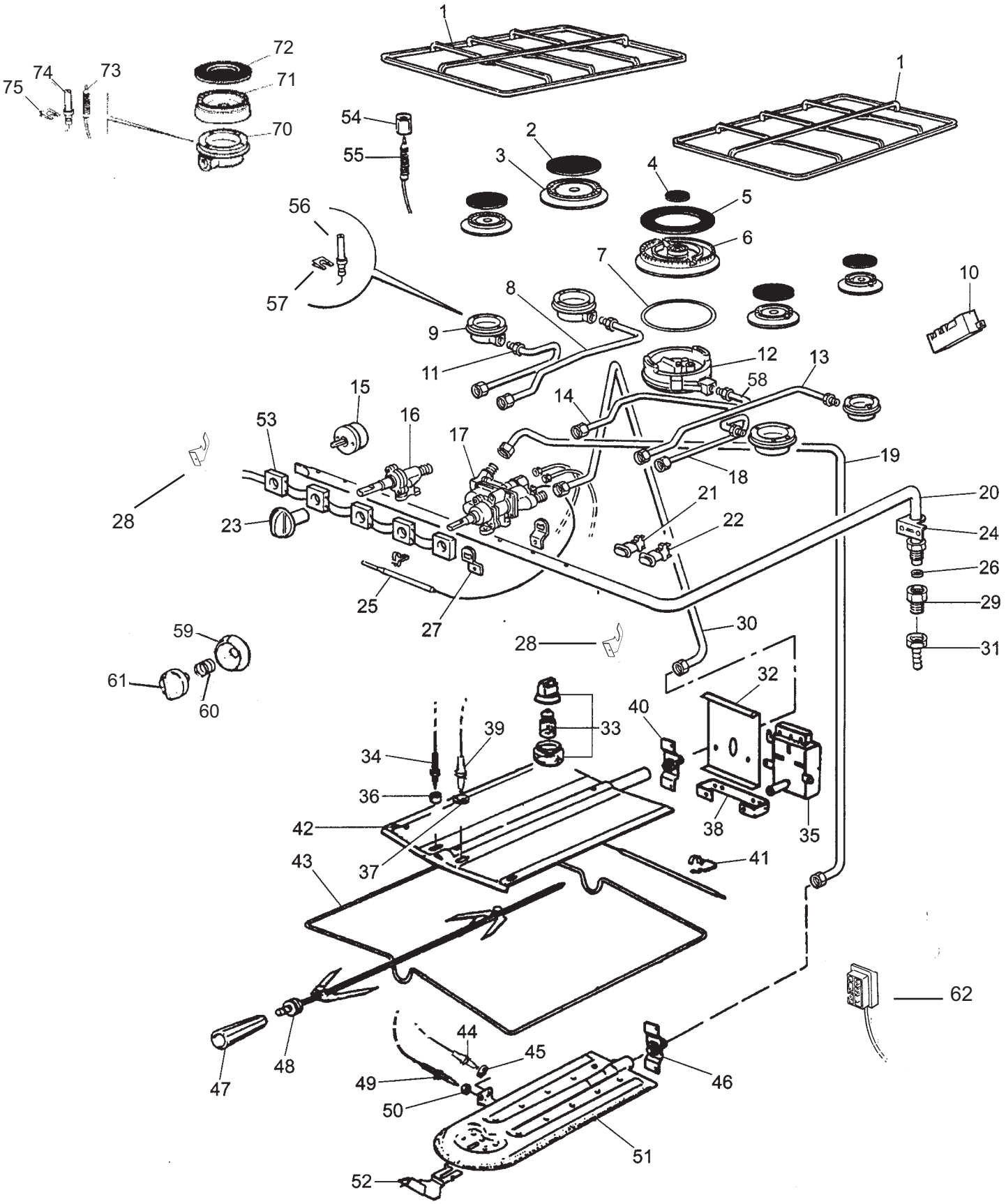

ABITACOLO / HABILLAGE / COOKER BODY TAV./PLANCHE/ DRAW. N. ***1***

Pos.	***COD.***	***DESCRIZIONE / DESCRIPTION***
01	166327	CARTER PARTIE ARRIERE PROTECTION COOKER BACK PART
03	385307	SUPPORTO CERNIERA DESTRA COPERCHIO SUPPORT CHARNIERE DROIT POUR COUVERCLE COVER RIGHT HINGE SUPPORT
03	385308	SUPPORTO CERNIERA SINISTRA COPERCHIO SUPPORT CHARNIERE GAUCHE POUR COUVERCLE COVER LEFT HINGE SUPPOR
04	993681	KIT COPERCHIO VETRO CONFECTION COUVERCLE EN VITRE GLASS COVER SET
05	607052	PIANO LAVORO TABLE DE TRAVAIL WORKING TABLE
07	38008601	FIANCO ESTERNO CUCINA COTE EXTERIUER EXTERNAL COOKER SIDE
08	603726	CRUSCOTTO BANDEAU CONTROL PANEL
11	393470	GUARNIZIONE FACCIATA 66N JOINT FAÇADE SEAL FOR FRONT PART
12	38976201	ZOCCOLO SOCLE COOKER BASE
13	60401901	FACCIATA CUCINA 66N FAÇADE CUSINIERE COOKER FRONT PART
17	167789	SCHIENA 66N COTE EXTERIEUR EXTERNAL SIDE
25	167778	SUPPORTO BRUCIATORE FORNO SUPPORT DU BRULEUR BURNER SUPPORT
26	602853	FONDO FORNO SOLE DU FOUR OVEN BOTTOM
27	604226	LECCARDA FORNO 6060 NERA LECHE-FRITE DU FOUR OVEN DRIPPING PAN
28	39291001	GRIGLIA FORNO GRILLE DU FOUR OVEN GRID
29	393069	REGGIGRIGLIA DX FORNO SUPPORT GRILLE DROIT RIGHT GRID SUPPORT
29	393070	REGGIGRIGLIA SX FORNO SUPPORT GRILLE GAUCHE LEFT GRID SUPPORT
30	606525	DIFFUSORE 66N NERO DIFFUSEUR DIFFUSOR
32	38597601	PANNELLO ISOLANTE FORNO PANNEAU ISOLATION POUR FOUR OVEN INSULATING PANEL

Pos.	COD.	DESCRIZIONE / DESCRIPTION
33	682965	MUFFOLA FORNO GROUPE FOUR OVEN SET
34	38597501	PANNELLO ISOLANTE SCHIENA – FORNO PANNEAU ISOLATION PARTIE ARRIERE – FOUR OVEN – BACK SIDE INSULATING PANEL
42	993110	KIT 4 PIEDI + PIASTRA MONO CONFECTION PIES + PLAQUE POUR PIEDS LEGS + PLATES SUPPORT SET
47	313180	MOTOVENTOLA 25 W MOTOVENTILATEUR FAN MOTOR
48	380702	CAMINO FG-GG VENT. CHEMIN CHIMNEY
49	680582	CAMINO 66N FGGV VENT. CHEMIN CHIMNEY

PORTA / PORTE/ DOOR TAV./PLANCHE/ DRAW. N. ***2***

Pos.	***COD.***	***DESCRIZIONE / DESCRIPTION***
10	38652002	PROFILO SUPERIORE PORTA FORNO PROFIL SUPERIEUR PORTE DU FOUR OVEN DOOR UPPER SECTION
12	608231	TRAVERSA VERTICALE PORTA FORNO PROFIL VERTICALE PORTE DU FOUR OVEN DOOR VERTICAL SECTION
13	391304	CERNIERA PORTA FORNO 60 N CHARNIERE PORTE DU FOUR OVEN DOOR HINGE
15	387927	PORTA CASSETTO PORTE CHAUFFE-PLATS CHAFING DISH DOOR
16	38002101	CONTROPORTA CASSETTO CONTRE PORTE CHAUFFE-PLATS CHAFING DISH COUNTER DOOR
17	160165	CASSETTO MAXI TIROIR DRAWER
22	687874	VETRO PORTA FORNO / PROFILO INFERIORE VITRE PORTE DU FOUR / PROFIL INFERIEUR OVEN DOOR GLASS / LOWER SECTION
23	379736	VETRO PORTA FORNO INTERNO ATERMICO VITRE PORTE DU FOUR INTERIEURE INNER OVEN DOOR GLASS
25	396471	MANIGLIA PORTA FORNO POIGNEE PORTE DU FOUR OVEN DOOR HANDLE
26	382000	ATTACCO CERNIERA PORTA FORNO SUPPORT CHARNIERE PORTE DU FOUR OVEN DOOR HINGE SUPPORT
29	381326	STAFFA DX CASSETTO MAXI SUPPORT DROIT TIROIR DRAWER RIGHT SUPPORT
29	381327	STAFFA SX CASSETTO MAXI SUPPORT GAUCHE TIROIR DRAWER LEFT SUPPORT
30	381328	SUPPORTO GUIDA CASSETTO SUPPORT POUR TIROIR SLIDE-WAY DRAWER SUPPORT
31	392610	KIT 2 GUIDE CASSETTO CONFECTION POUR TIROIR SLIDE-WAY DRAWER SET

EQUIPAGGIAMENTO GAS ELETTRICO/ EQUIPEMENT GAZ ELECTRIQUE /
GAS AND ELECTRIC EQUIPMENT TAV./PLANCHE/ DRAW. N. ***3***

Pos.	***COD.***	***DESCRIZIONE / DESCRIPTION***
01	392957	GRIGLIA PIANO LAVORO 2F AMBIDX GRILLE POUR TABLE DE TRAVAIL GRID FOR WORKING TABLE
04	389925	MICROCAPPELLO BRUCIATORE TCE MICRO CHAPEAU POUR COURONNE SMALL CAP FOR RING BURNER
05	389924	ANELLO BRUCIATORE TCE CHAPEAU CIRCULAIRE BRULEUR COURONNE RING CAP FOR RING BURNER
06	460612	BRUCIATORE TRIPLA CORONA DFND 3 BRULEUR COURONNE RING BURNER
07	383256	GUARNIZIONE BRUCIATORE TCE JOINT BRULEUR COURONNE RING BURNER GASKET
08	399219	BUNDY 66N POSTERIORE SINISTRO TUYAU BUNDY POSTERIEUR GAUCHE BUNDY TUBE REAR /LEFT BURNER
10	310044	GENERATORE 6P TRENO – FILTRO 230V GENERATEUR GENERATOR
11	399222	BUNDY 66N ANTERIORE SINISTRO TUYAU BUNDY ANTERIUER GAUCHE BUNDY TUBE FRONT LEFT BURNER
12	39994201	COPPA BRUCIATORE TCE GN 145 POT PORTE INJECTEUR BRULEUR COURONNE INJECTOR HOLDER FOR RING BURNER
13	399220	BUNDY 66N POSTERIORE DESTRO TUYAU BUNDY POSTERIEUR DROIT BUNDY TUBE REAR RIGHT BURNER
15	391555	CONTAMINUTI MINUTERIE MINUTE MINDER
16	398781	RUBINETTO D. 16 AUSILIARIO/SEMIRAPIDO DX GN 32 ROBINET AUXILIAIRE /SEMIRAPIDE DROIT SMALL/MEDIUM RIGHT BURNER TAP
16	398783	RUBINETTO TCE DX GN 70 ROBINET BRULEUR COURONNE DROIT RING RIGHT BURNER TAP
16	398916	RUBINETTO D. 16 0 RAPIDO SX GN 45 ROBINET RAPIDE DROIT BIG RIGHT BURNER TAP
16	398923	RUBINETTO D. 16 SEMI-RAPIDO SX GN 35 ROBINET SEMI-RAPIDE GAUCHE MEDIUM LEFT BURNER TAP
17	399076	TERMOSTATO V D16 2 VIA GN 47 2 MIC. THERMOSTAT THERMOSTAT
19	398942	BUNDY D7 66N TERMO FORNO TUXAU BUNDY THERMOSTAT FOUR BUNDY TUBE OVEN THERMOSTAT
20	687312	RAMPA D. 16 RAMPE DIAM. 16 MAIN GAS SUPPLY TUBE DIAM. 16
22	313801	FRUTTO INTERRUTTORE INTERRUPTEUR SWITCH

Pos.	COD.	DESCRIZIONE / DESCRIPTION
22	313855	PULSANTE OVALE INTERRUPTEUR SWITCH
22	313856	CORNICE OVALE CADRE BOUTON SWITCH FRAME
26	383262	GUARNIZIONE PORTAGOMMA DIRITTO 18X12X12 JOINT POUR EMBOUT DROITS HOSE CONNECTION SEAL
27	380569	BRIGLIA RUBIN.TERMO. (CPRC) CRAMPON BRIDLE D4.5
28	167711	STAFFA DX CRUSCOTTO – RAMPA SUPPORT DROIT BANDEAU – RAMPE RIGHT CONTROL PANEL – MAIN GAS SUPPLY TUBE SUPPORT
28	167712	STAFFA SX CRUSCOTTO – RAMPA SUPPORT GAUCHE BANDEAU – RAMPE LEFT CONTROL PANEL – MAIN GAS SUPPLY TUBE SUPPORT
29	384700	MANICOTTO EUROPA ½ GAS MANCHON COUPLING
30	398662	BUNDY GRILL TUYAU BUNDY BRULEUR GRILLOIR BUNDY TUBE GRILL BURNER
33	306212	PORTA LAMPADA 15W – 230-240V PORTE LAMPE LAMP HOLDER
34	399071	TERMOCOPPIA GRILL L 350 THERMOCOUPLE GRILLOIR THERMOCOUPLE GRILL
37	631607	DADO CANDELA GRILL CAPUCHON POUR BOUGIE D'ALLUMAGE GRILLOIR IGNITION PLUG GRILL CUP
39	391646	CANDELA GRILL L 500 BOUGIE D'ALLUMAGE GRILLOIR IGNITION PLUG GRILL BURNER
40	698264	SUPPORTO UGELLO GRILL D. 1,05 SUPPORT INJECTEURS NOZZLES SUPPORT
42	693309	BRUCIATORE GRILL BRULEUR GRILLOIR GRILL BURNER
45	631605	DADO CANDELA FORNO CAPOUCHON BOUGIE D'ALLUMAGE FOUR IGNITION PLUG OVEN CUP
46	698209	SUPPORTO UGELLO FORNO D.1,30 SUPPORT INJECTEUR NOZZLE SUPPORT
50	631606	DADO MB8 TERMOCOPPIA CAPUCHON POUR THERMOCOUPLE THERMOCOUPLE CUP
51	692746	BRUCIATURA FORNO BRULEUR DE FOUR OVEN BURNER
52	160007	ACCENDINO ALLUMEUR BRULEUR DU FOUR OVEN BURNER LIGHTER
53	313171	4 MICRO COASSIALE 60S ALLUMAGE COAXIAL IGNITION SWITCH

Pos.	COD.	DESCRIZIONE / DESCRIPTION
58	399221	BUNDY TCE ANTERIORE DX TUYAU BUNDY COURONNE ANTERIEUR DROIT BUNDY TUBE FRONT RIGHT RING BURNER
59	387228	ROSONE MANOPOLE COLLERETTE POUR MANETTE RING FOR KNOB
60	224731	MOLLA MANOPOLA TELE. RESSORT POUR MANETTE KNOB SPRING
61	395484	MANOPOLA ELETTRICA TELE MANETTE ELECTRIQUE ELECTRIC KNOB
61	395482	MANOPOLA GAS TELE BRUCIATORI PIANO MANETTE GAZ BRULEURS TABLE DE TRAVAIL GAS KNOB FOR COOKTOP BURNERS
62	304754	MORSETTIERA – CAVO PA309 BORNE – CABLE TERMINAL BOARD – CABLE
70	398683	COPPA AUSILIARIA DFND 3 GN 77 POT PORTE INSECTEUR BRULEUR AUXILIAIRE INJECTOR HOLDER FOR SMALL BURNER
70	398684	COPPA SEMI-RAPIDA DFND 3 GN 97 POT PORTE INSECTEUR BRULEUR SEMI-RAPIDE INJECTOR HOLDER FOR MEDIUM BURNER
70	398685	COPPA RAPIDA DFND 3 GN 123 POT PORTE INSECTEUR BRULEUR RAPIDE INJECTOR HOLDER FOR BIG BURNER
71	460616	BRUCIATORE DEFENDI 3 AUSILIARIO BRULEUR AUXILIAIRE SMALL BURNER
71	460617	BRUCIATORE DEFENDI 3 SEMI-RAPIDO BRULEUR SEMI-RAPIDE MEDIUM BURNER
71	460618	BRUCIATORE DEFENDI 3 RAPIDO BRULEUR RAPIDE BIG BURNER
72	380857	CAPPELLO DEFENDI AUSILIARIO DFND 3 CHAPEAU BRULEUR AUXILIAIRE SMALL BURNER CAP
72	380858	CAPPELLO DEFENDI SEMI-RAPIDO DFND 3 CHAPEAU BRULEUR SEMI-RAPIDE MEDIUM BURNER CAP
72	380859	CAPPELLO DEFENDI RAPIDO DFND 3 CHAPEAU BRULEUR RAPIDE BIG BURNER CAP
73	398876	TERMOCOPPIA L.300 THERMOCOUPLE THERMOCOUPLE
73	398877	TERMOCOPPIA L.600 THERMOCOUPLE THERMOCOUPLE
73	399059	TERMOCOPPIA TCE THERMOCOUPLE THERMOCOUPLE
74	391170	CANDELA ACCENSIONE BRUCIATORI L. 260 BOUGIE D'ALLUMAGE BRULEURS IGNITION PLUG BURNERS
74	391171	CANDELA ACCENSIONE BRUCIATORI L. 800 BOUGIE D'ALLUMAGE BRULEURS IGNITION PLUG BURNERS

Pos.	COD.	DESCRIZIONE / DESCRIPTION
74	391196	CANDELA TCE BOUGIE D'ALLUMAGE IGNITION PLUG
75	220803	CLIP TERMOCOPPIA CLIP THERMOCOUPLE THERMOCOUPLE CLIP
S.R. S.D. O.R.	381063	CATENA GENOVESE ZINCATA CHAINE DE ZINC ZINC PLATED CHAIN
S.R. S.D. O.R	385987	PANNELLO BIANCO CAMINO GAS VENT. PANNEAU CHEMIN PANEL CHIMNEY
S.R. S.D. O.R.	387673	STAFFA DX ZOCCOLO SUPPORT DROIT SOCLE COOKER BASE RIGHT SUPPORT
S.R. S.D. O.R.	387674	STAFFA SX ZOCCOLO SUPPORT GAUCHE SOCLE COOKER BASE LEFT SUPPORT
S.R. S.D. O.R.	39291101	GRIGLIA DI RIDUZIONE GRILLE REDUCTION REDUCTION GRID
S.R. S.D. O.R.	691943	KIT UGELLI G30 – 29 MBAR CONFECTION INJECTEURS NOZZLES SET

S.R.= SU RICHIESTA
S.D.= SU DEMANDE
O.R.= ON REQUEST