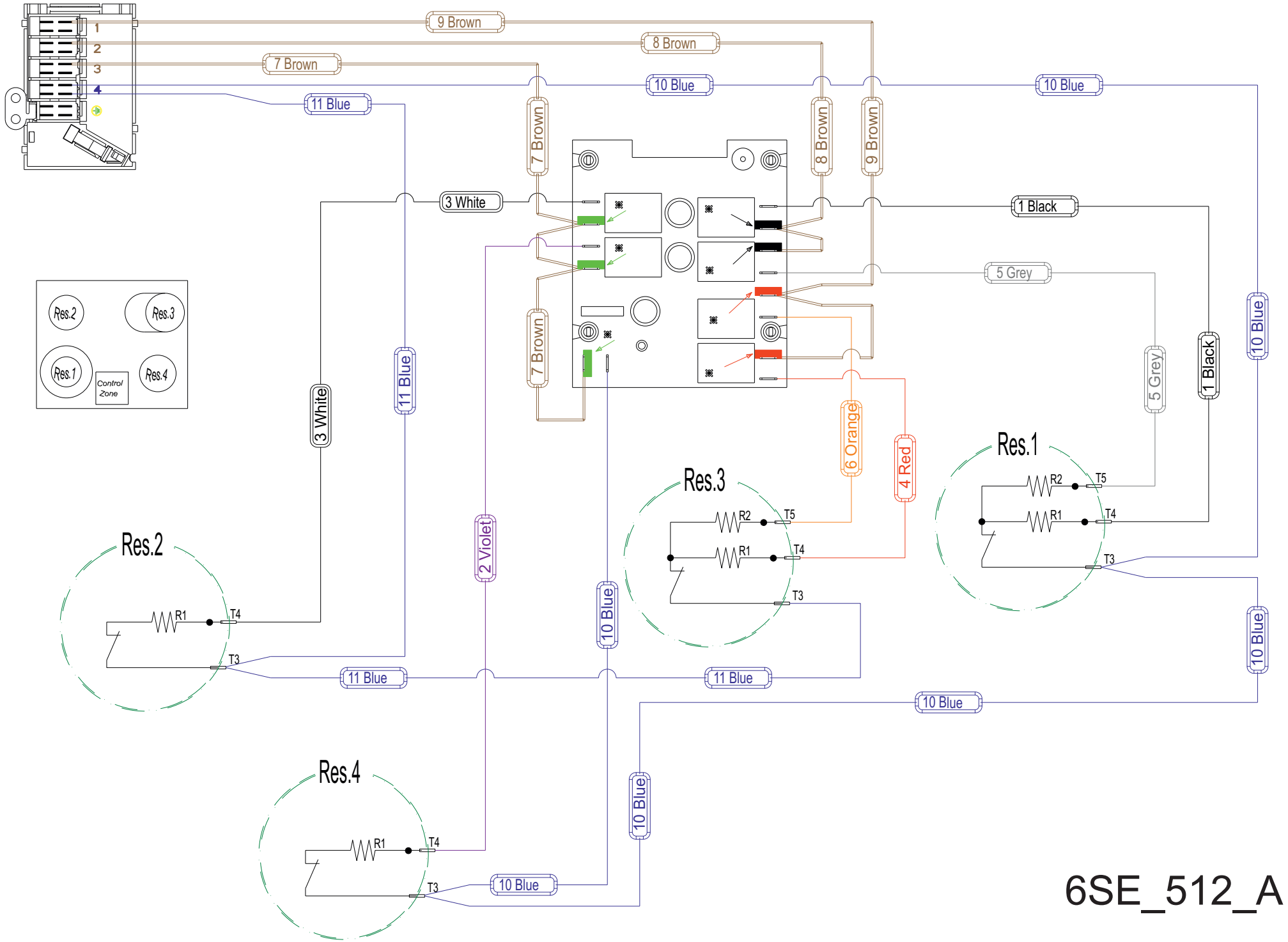
1
2
3
4
9 Brown
8 Brown
7 Brown
10 Blue
10 Blue
11 Blue
7 Brown
8 Brown
9 Brown
3 White
1 Black
5 Grey
Res.2
Res.3
Res.1
Res.4
Control Zone
3 White
11 Blue
7 Brown
6 Orange
4 Red
5 Grey
1 Black
10 Blue
Res.1
R2
R1
T5
T4
T3
Res.3
R2
R1
T5
T4
T3
Res.2
R1
T4
T3
2 Violet
10 Blue
11 Blue
11 Blue
10 Blue
10 Blue
Res.4
R1
T4
T3
10 Blue
10 Blue

6SE_512_A